RP-HⅢ02*-45Z/45A-DC24VS

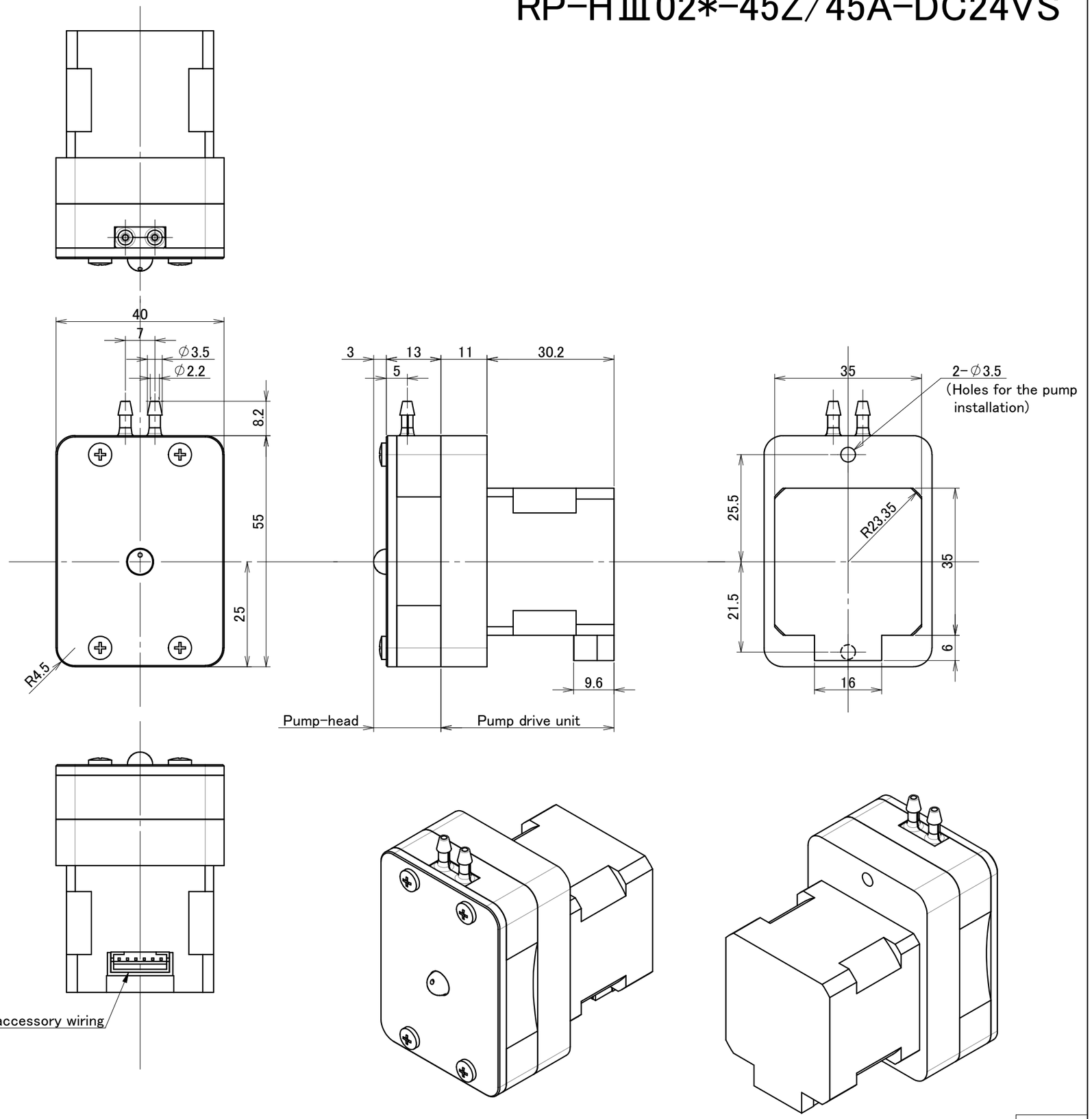

Accessory wiring for RP-HⅢ02*-45Z-DC24VS
(Without JST connector for driver board compatibility)

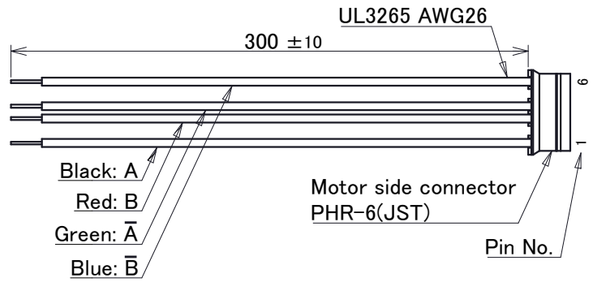

Accessory wiring for RP-HⅢ02*-45A-DC24VS
(With JST connector for driver board compatibility)

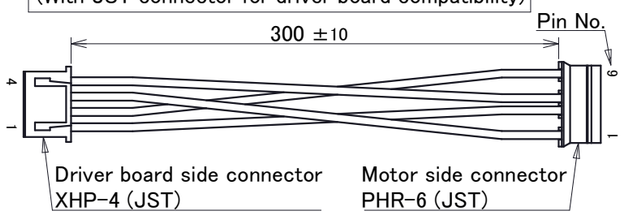

Scale 1:1

Aquatech Co., Ltd.

Unit: mm